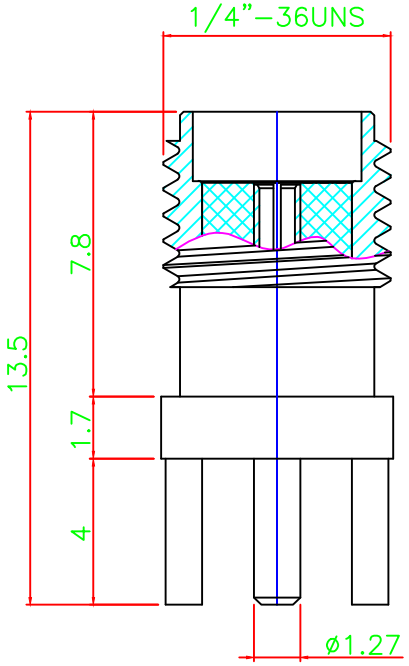

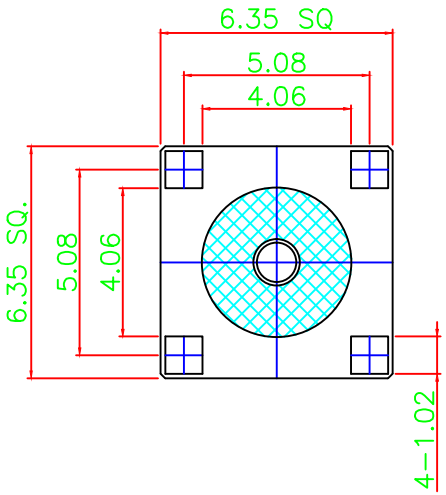

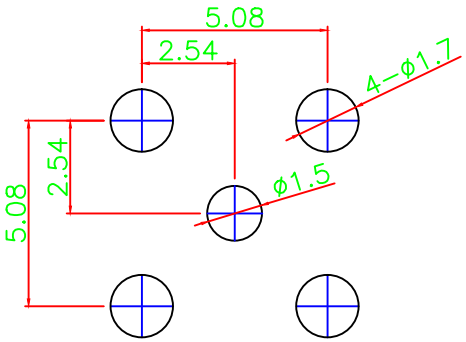

NO	Items	Specs
1	Impedance	50Ω
2	Frequency	DC~18GHz
3	V.S.W.R	1.25 Max
4	Working Voltage	500V
5	Dielectric Withstanding Voltage	AC 1500V
6	Insulation Resistance	5000 MΩ Min
7	Contact Resistance	Center contact ≤ 3.0mΩ
		Outer contact ≤ 2.0mΩ
8	Temperture Range	−55°C ~ +165°C
9	Mating	Screw−On
10	Material/Finish	All RoHS Compliant

NO	Description	Material	Finish
1	Body	Brass	Gold
2	Contactor	BeCu	Gold
3	Insulator	Teflon	–

Dimensions Are In Millimeters
Unless Otherwise Specified
Tolerances

0.5–6 = ± 0.2
6–30 = ± 0.4
30–120 = ± 0.6
120–315 = ± 1.0
315–1000 = ± 1.6
1000–2000 = ± 2.4

ROHS COMPLIANT

COSMTEC

COSMTEC RESOURCES CO.,LTD

DRAFT | CHECKED | APPROVED

The Drawing Contans Information That Is Proprietary To Cosmtec Resources Co., Ltd
And Should Not Be Used Without Written Permission. www.cosmtec.com

Part No. S–036–20

Title: SMA JACK SOLDER FOR PCB MOUNT

DATE:	SCALE:	UINT	REV
MAR/04/2021	1:1	m/m	A